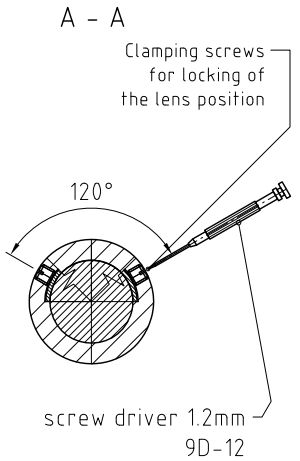

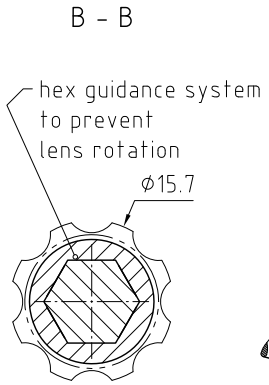

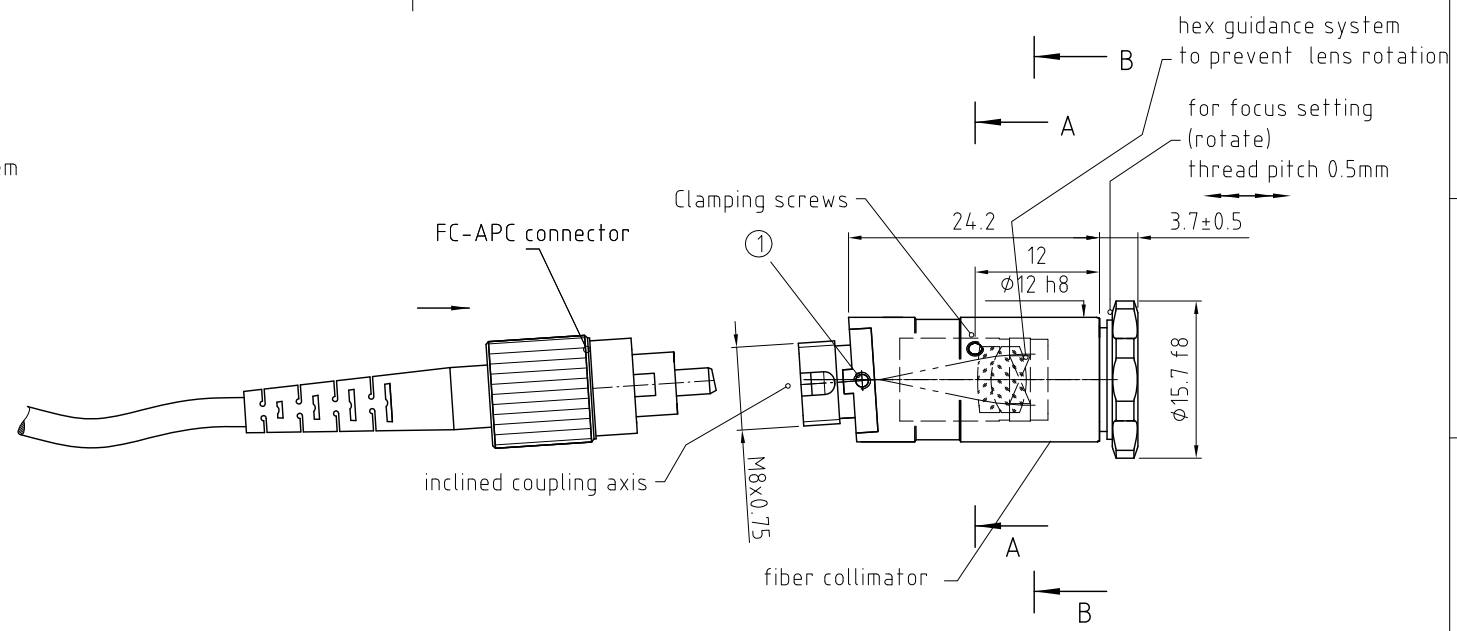

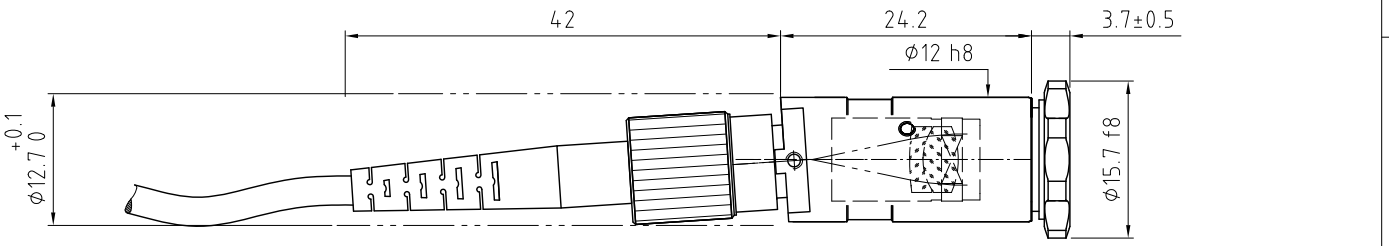

Tools for assembly and adjustment

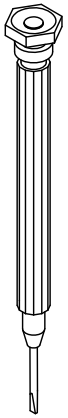

screw driver
size 1.2mm
9D-12

(1) Pin screw for additional locking of the fiber ferrule.
- before pulling the FC connector:
  unlock the pin screw.
- before inserting the FC connector:
  make sure the ferrule receptacle is not blocked by the pin screw .

				DIN 7168 fein mittel grob		Oberfläche	Maßstab 2:1
					Datum	Name	
				Bearb.	29.04.2013		Fiber collimator
				Gepr.			60FC-F-4-xx
				Norm			
				Schäfter&Kirchhoff OPTO-SENSORIK UND MESSTECHNIK OPTIK-ENTWICKLUNG·ELKTRONIK·SENSORTECHNIK·SOFTWARE			9709-2002-0473
Zust.	Änderung	Datum	Name	EDV Nr. 970920020473			

Position | Menge

Blatt 1/1 BI

29.04.2013