! Pin screw for additional locking of the fiber ferrule:
- before pulling the FC-connector:
  unlock the pin screw.
- before inserting the FC-connector:
  make sure the ferrule receptacle is not blocked
  by the pin screw !

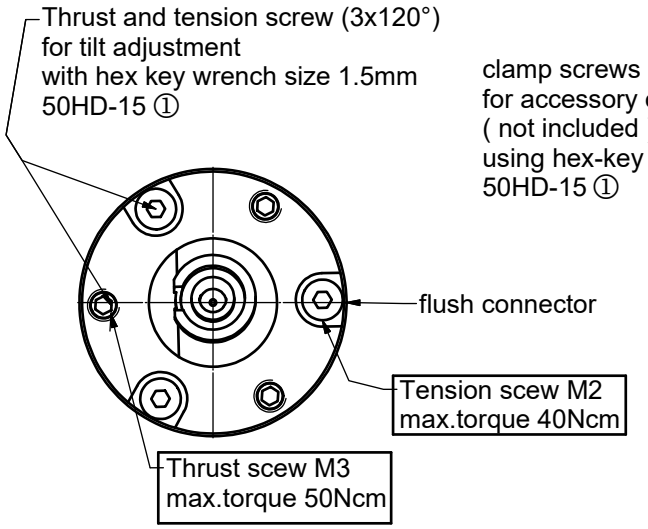

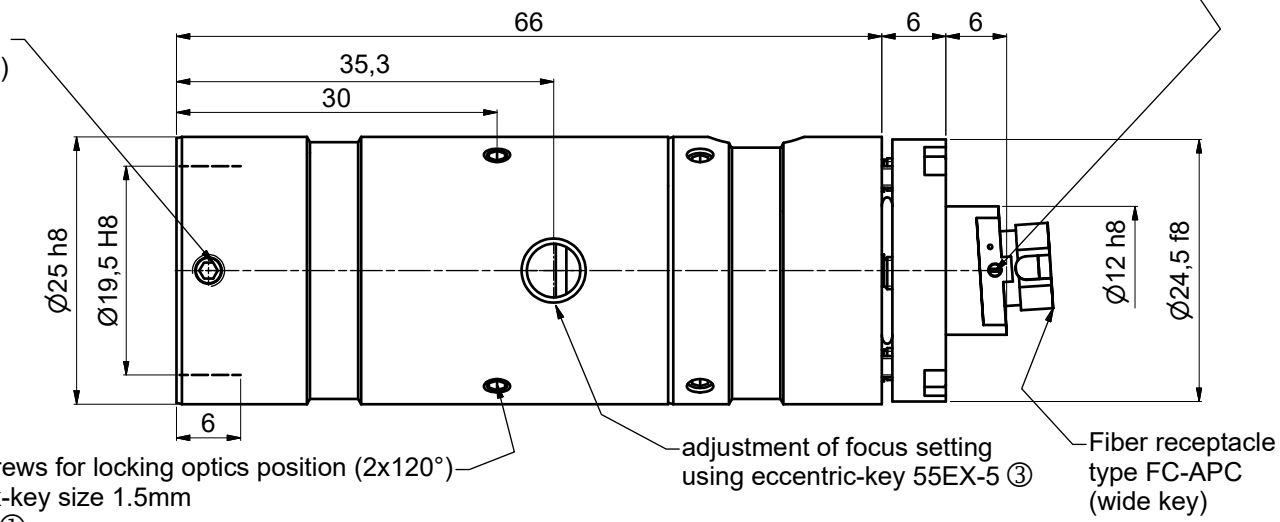

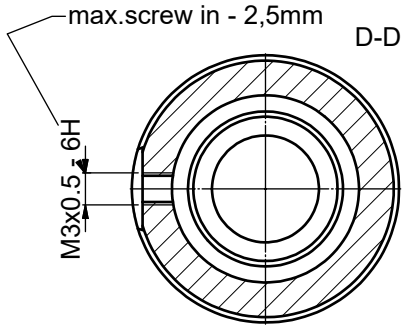

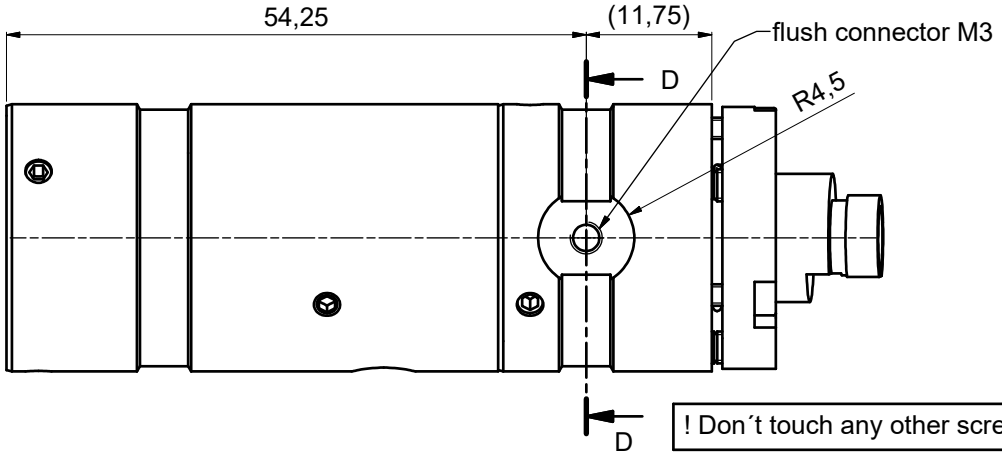

! Don´t touch any other screws !

Tools for assambly and adjustment

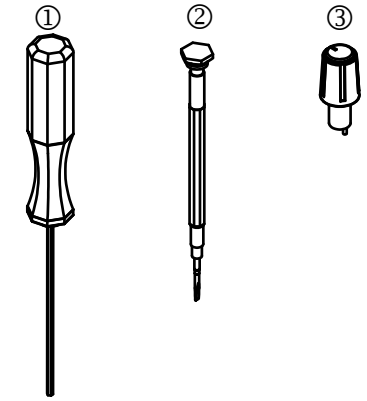

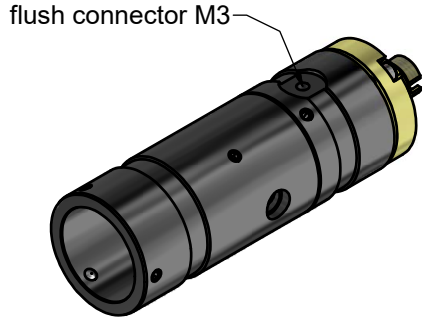

Dimensions DIN EN ISO 14405				Scale: 2:1	
				60FC-T-4-S60-49-XV	
		Date	Name	Fiber collimator f'60/NA0.14-XV	
	editor	10.08.2023	Tp	Fiber receptacle type FC-FCA with flush connection M3	
	exam.				
	free			Customer Drawing	
Schäfter+Kirchhoff GmbH OPTICS, METROLOGY, AND PHOTONICS				9803-1225-0501	Sice: A3
File: 980312250501.idw				Model: 980312250501.iam	Page: 2