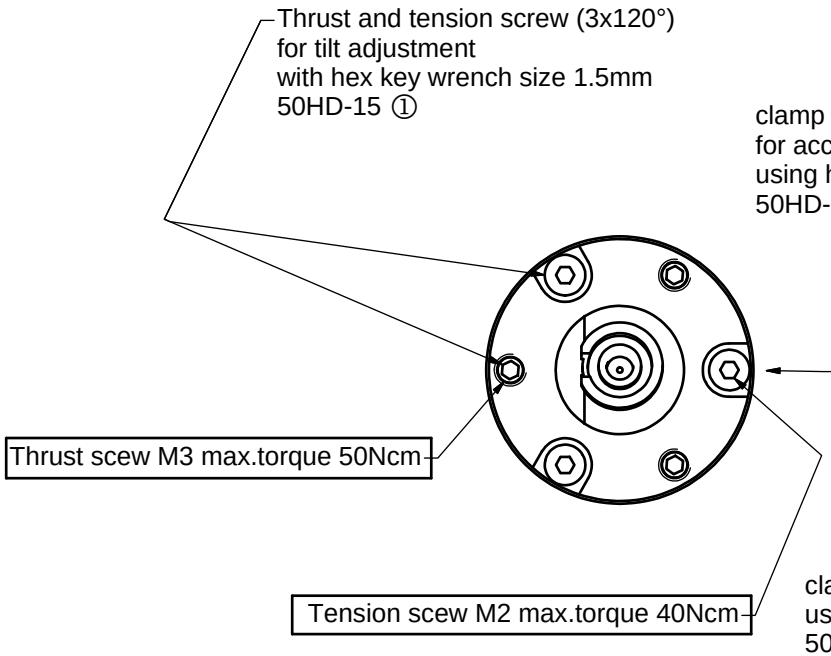

! Pin screw for additional locking of the fiber ferrule:
- before pulling the FC-connector:
  unlock the pin screw.
- before inserting the FC-connector:
  make sure the ferrule receptacle is not blocked
  by the pin screw !

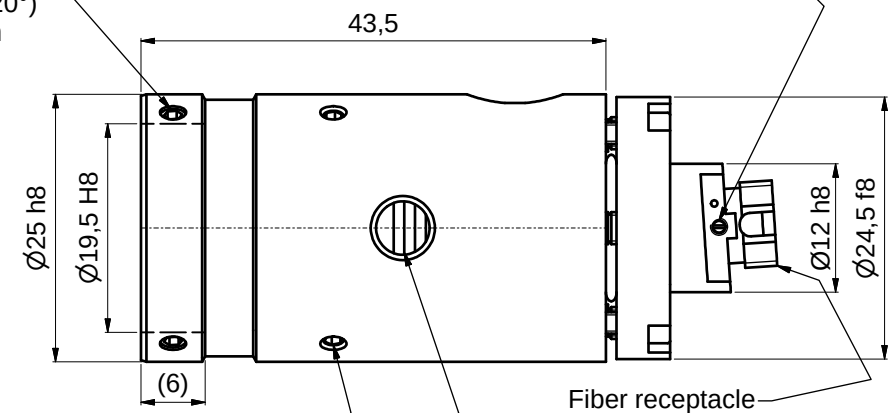

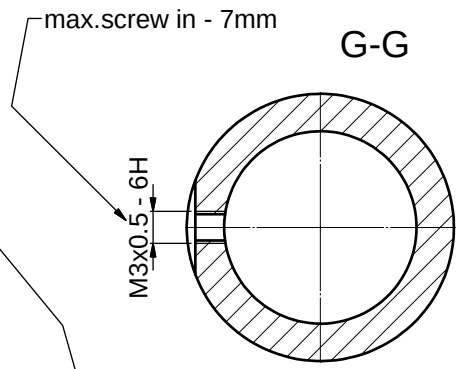

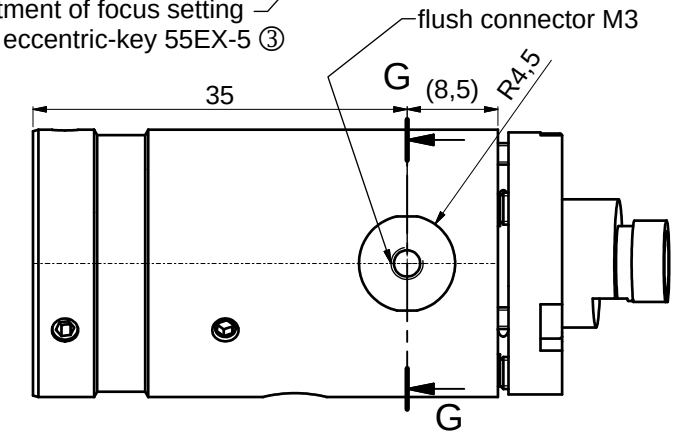

Tools for assambly and adjustment

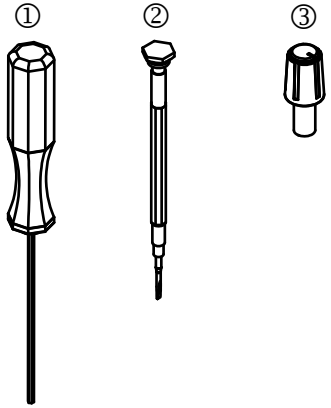

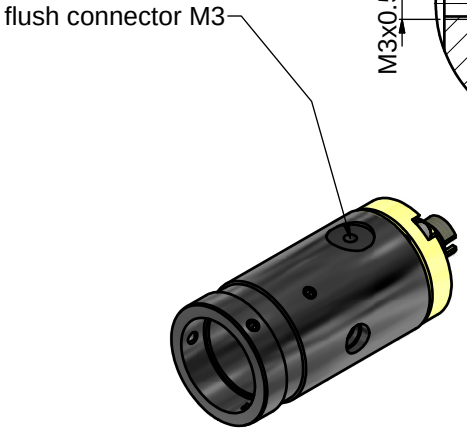

! Don´t touch any other screws !

						Allgemein-toleranz ISO 2768 - f	Maßstab: 2:1
							60FC-T-4-M30-24/26/37 60FC-T-4-M35-xx 60FC-T-4-M40-xx
					Datum	Name	Fiber collimator f'30-40mm
				Bearb.	29.07.2015	Tp	
				Gepr.			Fiber receptacle type FC-APC with flush connection M3
				Norm			
				Schäfter&Kirchhoff OPTO-SENSORIK UND MESSTECHNIK OPTIK-ENTWICKLUNG ELKTRONIK SENSORTECHNIK SOFTWARE			9803-1223-6700
Zust.	Änderungen	Datum	Name	Datei: 980312236700.idw			Model: 980312236700.iam

Blatt A3
Blatt: 1