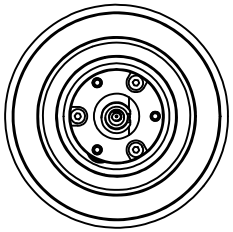

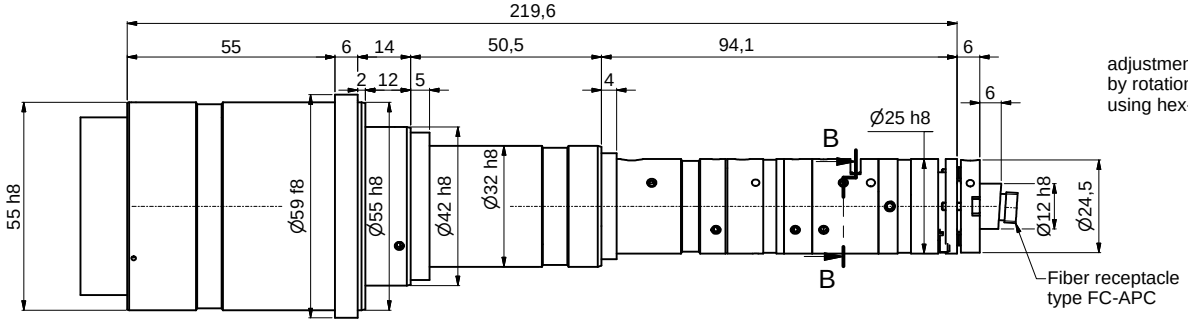

B-B

adjustment of orientation waveplate
by rotation the optics
using hex-key 50HD-15 ①

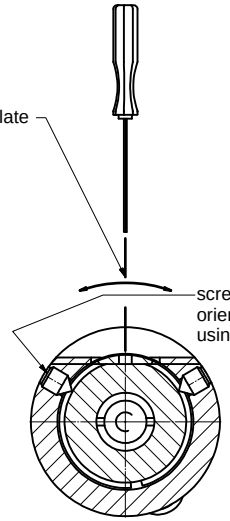

screws (2x120°) for locking
orientation waveplate
using hex-key 50HD-15 ①

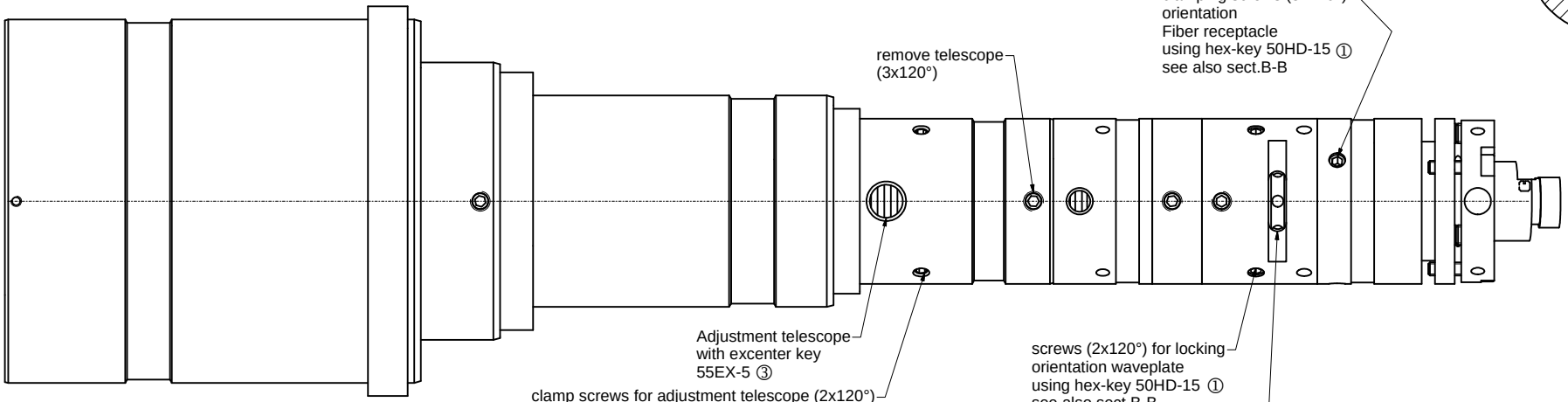

clamping screws (3x120°)
orientation
Fiber receptacle
using hex-key 50HD-15 ①
see also sect.B-B

remove telescope
(3x120°)

Adjustment telescope
with excenter key
55EX-5 ③

clamp screws for adjustment telescope (2x120°)
using hex-key size 1.5mm
50HD-15 ①

screws (2x120°) for locking
orientation waveplate
using hex-key 50HD-15 ①
see also sect.B-B

adjustment of orientation waveplate
by rotation the optics
using hex-key 50HD-15 ①
see also sect.B-B

Tools for assambly and adjustment

hex-key	screw driver	eccentric-key
size 1.5mm	size 1.2mm	55EX-5
50HD-15	9D-12	
①	②	③

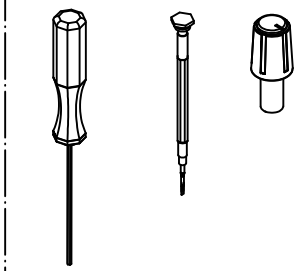

! Don´t tough other screws !

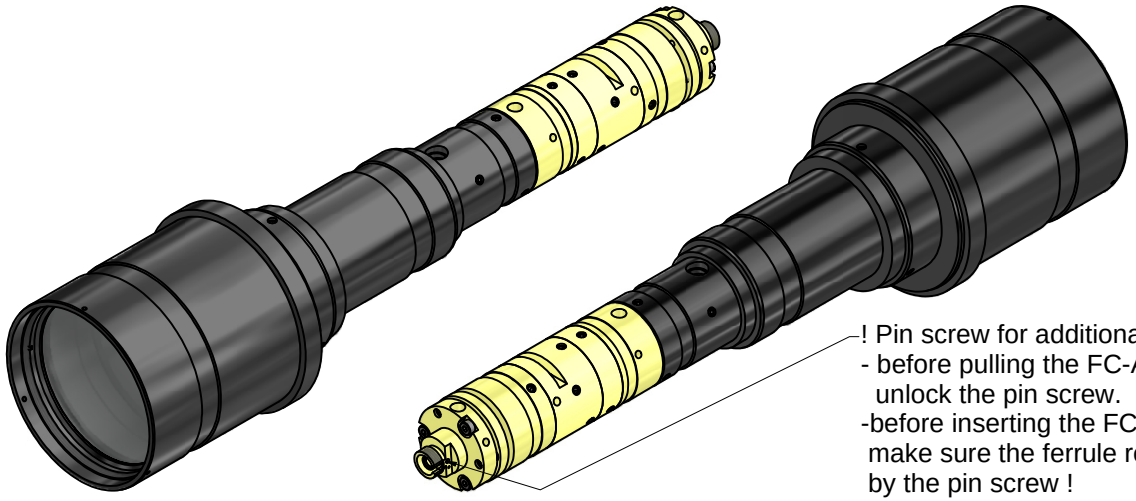

! Pin screw for additional locking of the fiber ferrule:
- before pulling the FC-APC-connector:
  unlock the pin screw.
-before inserting the FC-APC-connector:
  make sure the ferrule receptacle is not blocked
  by the pin screw !

						Allgemein-toleranz ISO 2768 - f	Maßstab: 1:1
							60FC-E-Q780-4-F70x210 #516685
					Datum	Name	Fiber Collimator
				Bearb.	21.06.2018		
				Gepr.			
				Norm			60FC-E-Q780-4-F70x210
				Schäfter&Kirchhoff OPTO-SENSORIK UND MESSTECHNIK			9802-4110-0117
							Blatt A2
							Blatt: 2
Zust.	Änderungen	Datum	Name	Datei: 980241100117.idw			Model: 980241100117.iam