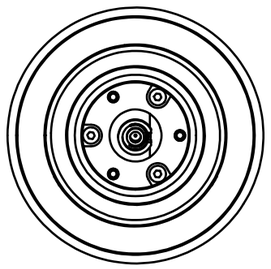

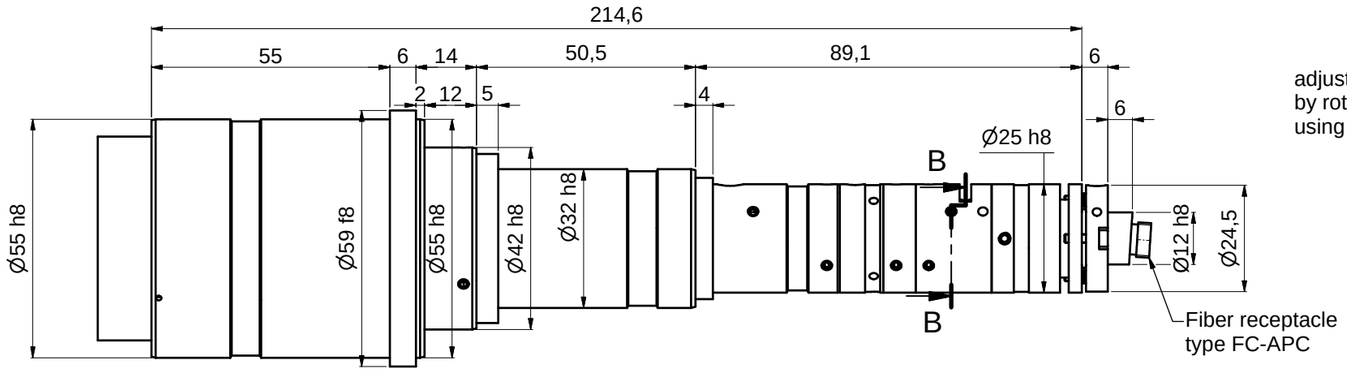

B-B

adjustment of orientation waveplate
by rotation the optics
using hex-key 50HD-15

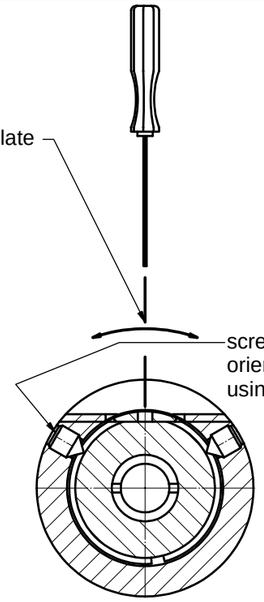

screws (2x120°) for locking
orientation waveplate
using hex-key 50HD-15

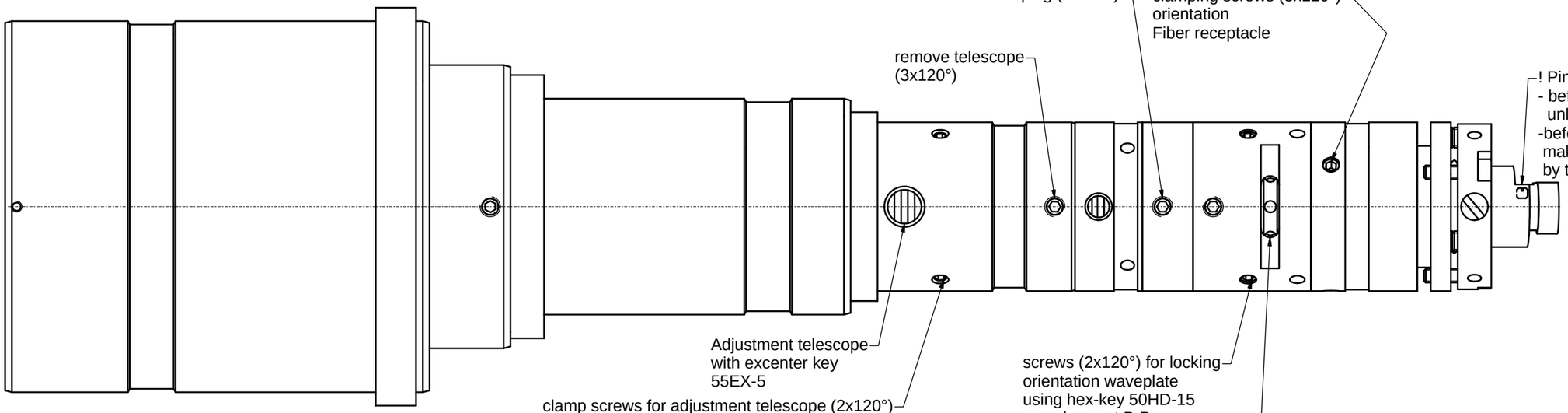

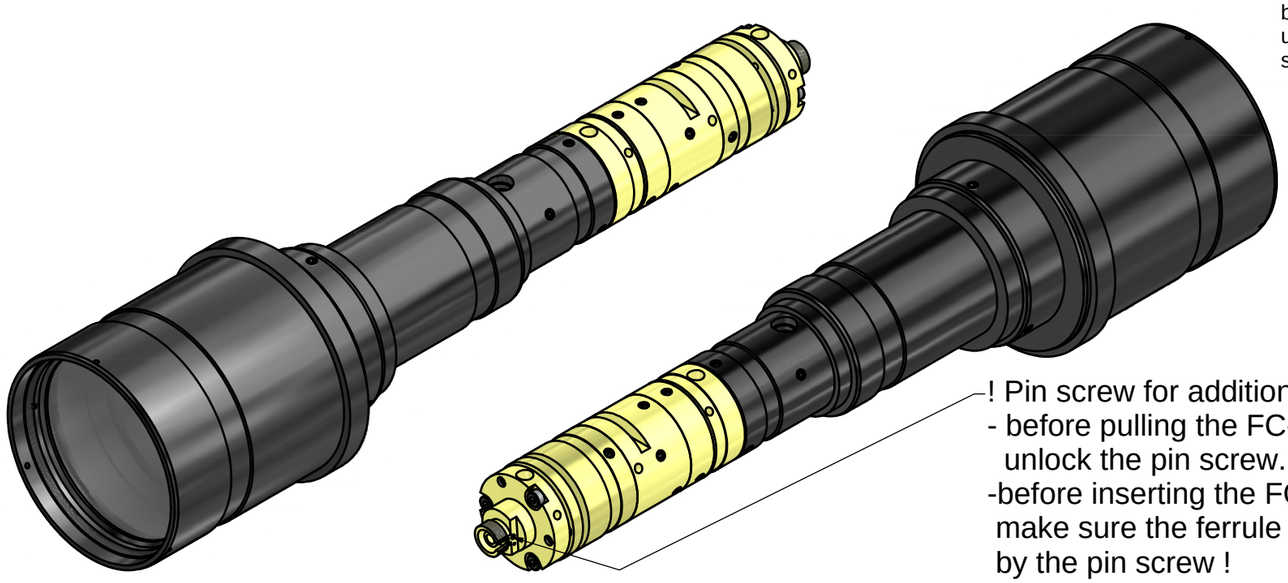

! Pin screw for additional locking of the fiber ferrule:
- before pulling the FC-APC-connector:
unlock the pin screw.
-before inserting the FC-APC-connector:
make sure the ferrule receptacle is not blocked
by the pin screw !

! Don´t tough other screws !

					Allgemein-toleranz ISO 2768 - f	Maßstab: 1:1
						60FC-Q780-4-E36x18-780 #709696
				Datum	Name	Fiber Collimator
				Bearb. 21.05.2014		
				Gepr.		60FC-Q780-4-E36x18-780
				Norm		
				Schäfter&Kirchhoff OPTO-SENSORIK UND MESSTECHNIK		9802-4110-0115 — Blatt A2 — Blatt: 2
Zust.	Änderungen	Datum	Name	Datei: 980241100115.idw		Model: 980241100115.iam