②! Pin screw for additional locking of the fiber ferrule:
- before pulling the FC-connector:
  unlock the pin screw.
- before inserting the FC-connector:
  make sure the ferrule receptacle is not blocked
  by the pin screw !

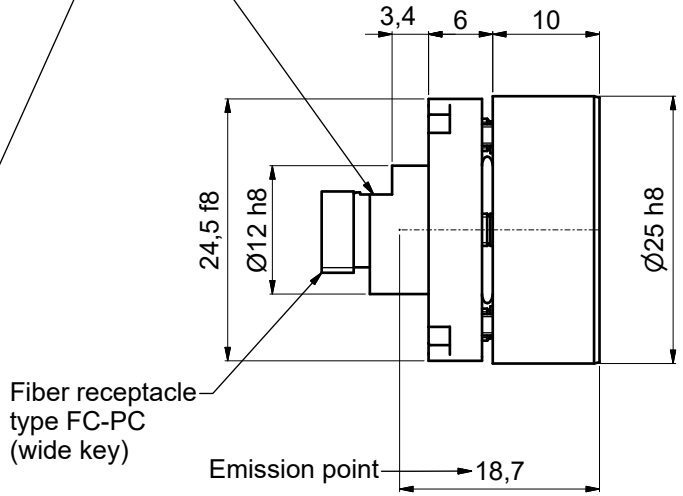

Thrust and tension screw (3x120°)
for tilt adjustment
with hex key wrench size 1.5mm
50HD-15 ①

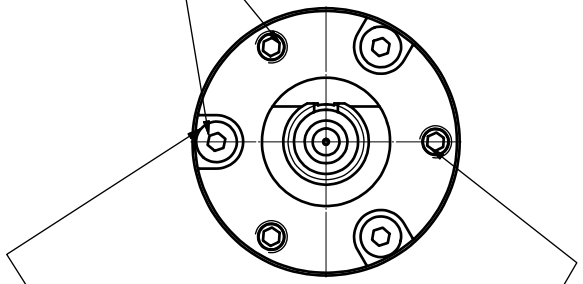

Thrust screw M3 max.torque 50Ncm

Tension scew M2 max.torque 40Ncm

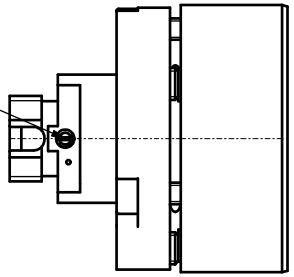

Tools for assembly and adjustment

hex-key size 1.5mm 50HD-15	screw driver size 1.2mm 9D-12
①	②

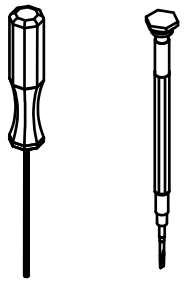

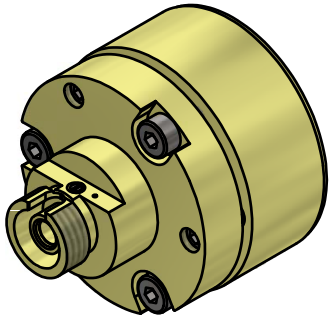

For information only
Not for manufacturing purposes

Dimensions DIN EN ISO 14405			Scale: 2:1
			25AM-0-FC
	Date	Name	25AM-0-FC
editor	08.04.2020	Trapp	FC Adapter w/o Optics, Ø 25 mm
exam.			
free			Customer Drawing
Schäfter+Kirchhoff GmbH OPTICS, METROLOGY, AND PHOTONICS			9709-2052-0621 — Sice: A3 — Page: 1
File: 970920520621.idw			Model: 970920520621.iam