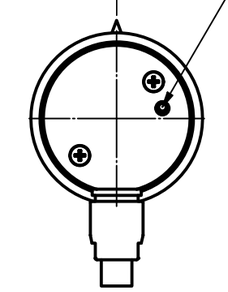

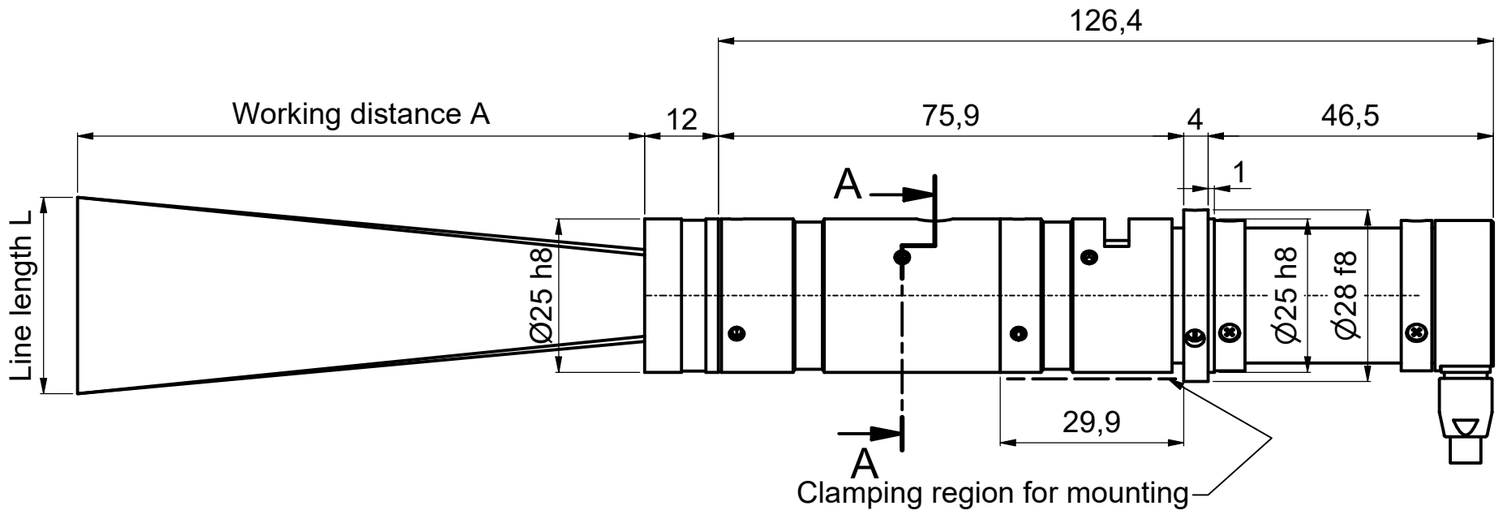

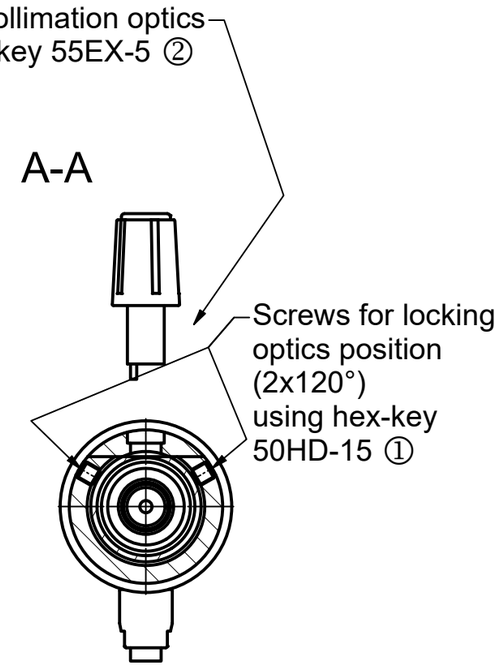

Tools for assembly and adjustment

hex-key size 1.5mm 50HD-15	eccentric-key 55EX-5	screw driver size 1.6mm 9D-16
①	②	③

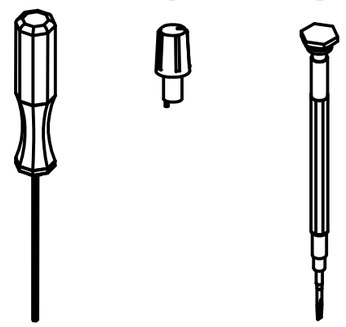

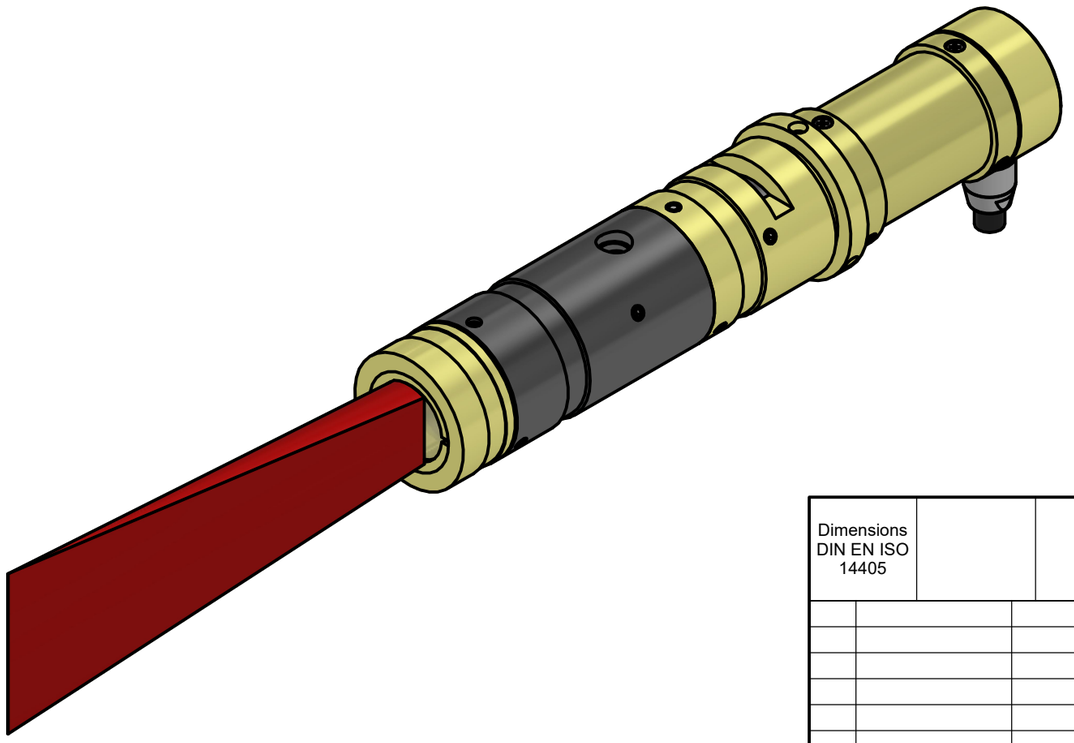

! Don´t touch any other screws !

For information only
Not for manufacturing purposes

Dimensions DIN EN ISO 14405					Scale: 1:1
				Date	Name
			editor	16.05.2025	Trapp
			exam.		
			free		
			Schäfter+Kirchhoff GmbH OPTICS, METROLOGY, AND PHOTONICS		13LN40+ 90CR+120 Laser Diode Modules
					Customer Drawing
					9512-1000-0059
			File: 951210000059.idw		Model: 951210000059.iam

Sice: A3
Page: 1