! Pin screw for additional locking of the fiber ferrule:
- before pulling the FC-connector:
  unlock the pin screw.
- before inserting the FC-connector:
  make sure the ferrule receptacle is not blocked
  by the pin screw !

Thrust and tension screw (3x120°)
for tilt adjustment
with hex key wrench size 1.5mm
50HD-15 ①

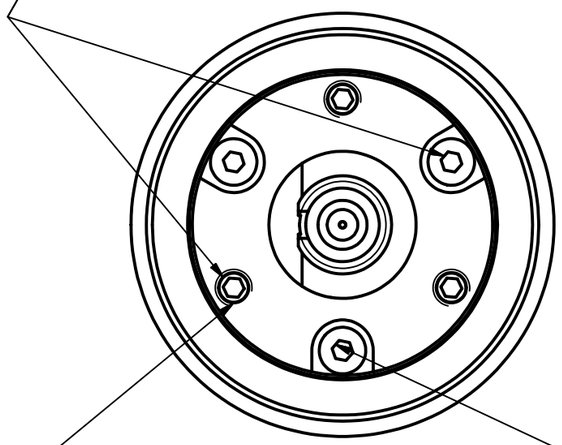

Thrust scew M3 max.torque 50Ncm

Tension scew M2 max.torque 40Ncm

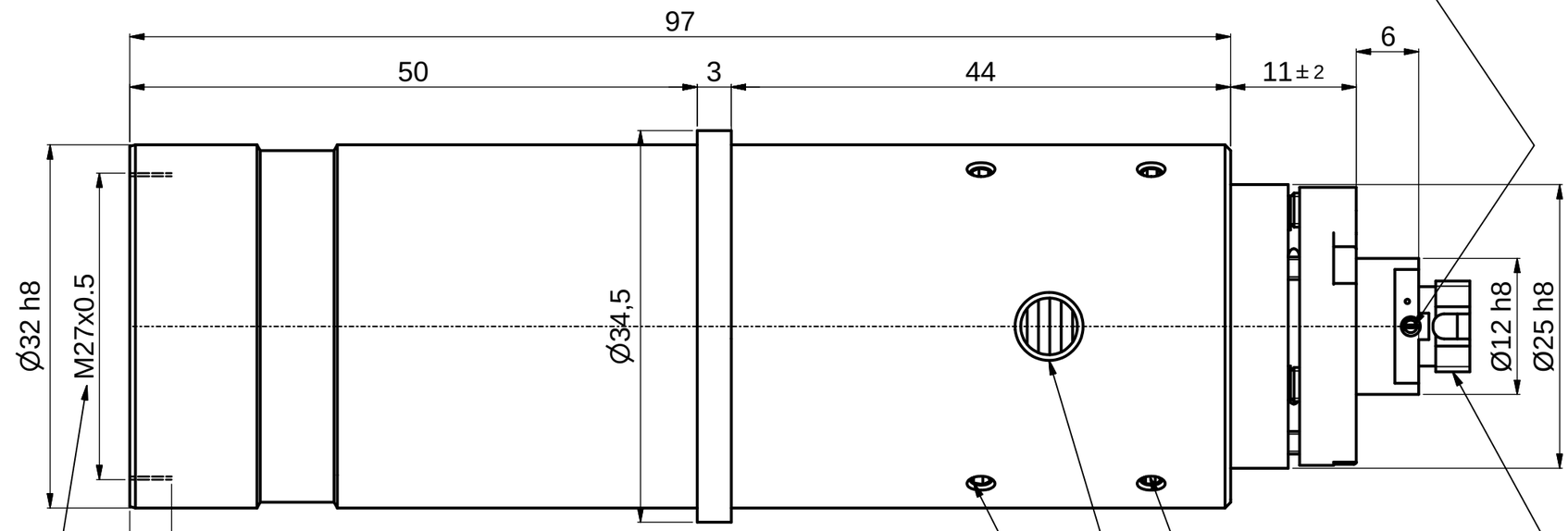

②

clamp screws for locking optics position (3x120°)
using hex-key size 1.5mm
50HD-15 ①

Fiber receptacle
type FC-PC

adjustment of focus setting
using eccentric-key 55EX-5 ③

thread M27x0.5 for
accessory optics

hex-key
size 1.5mm
50HD-15
①

screw driver
size 1.2mm
9D-12
②

eccentric-key
55EX-5
③

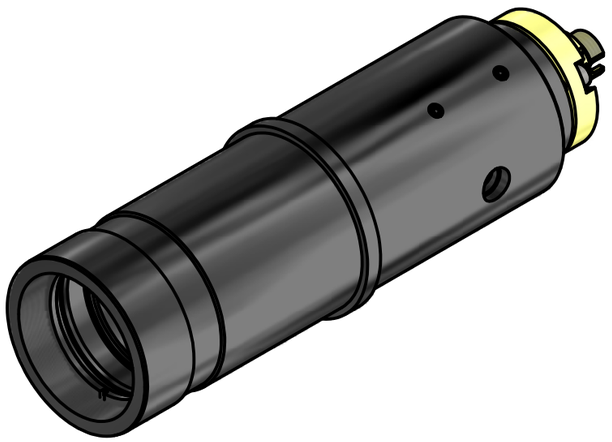

! Don´t touch any other screws !

					Allgemein-toleranz ISO 2768 - f	Maßstab: 2:1
						60FC-T-0-M100S-xx
				Datum	Name	Fiber collimator f´100mm
				Bearb. 09.03.2015	Tp	
				Gepr.		Fiber receptacle type FC-PC
				Norm		
				Schäfter&Kirchhoff OPTO-SENSORIK UND MESSTECHNIK		9802-4186-2300 — Blatt A3 — Blatt: 2
Zust.	Änderungen	Datum	Name	Datei: 980241862300.idw		Model: 980241862300.iam